COMPANY INTRODUCTION

VOLTEX International Technology Limited wasfounded in 1999, specializes in the research, development and manufacturing of the globally renowned VOLTEX brand Reserve Power Batteries, SLI batteries and Motive Power Batteries. After years of innovation, VOLTEX has become a diversified and leading manufacturer of lead-acid batteries in China. VOLTEX enterprises consist of five China production factories located in Shenzhen, Dongguan, Jiangsu, Zhaoqing and Anhui. It covers an area of nearly 500,000 square meters, with 46 battery production lines and corresponding testing machines, 2 research and development centers in Zhaoqing and Jiangsu. Today, VOLTEX has over 6,000 employees, more than 300 researchers and technicians worldwide. VOLTEX has mainly produced the following types- AGM VRLA battery, GEL battery, Tubular plate batteries (OPzV, OPzS, PzS, PzB) , SLI battery, Motorcycle battery, Golf Cart battery, and Electric Vehicle batteries (EVs). These products are widely used by many different industries, such as telecommunication, power systems, radio and television systems, railway, solar, UPS, electric vehicles, automobile, golf carts, forklifts, emergency lights etc. The annual gross production volume exceeds 3.8 million KVAh.

We believe that VOLTEX is your best choice.

VOLTEX VRLA-AGM BATTERY TERMINAL OPTIONS

Unit:mm[inch]

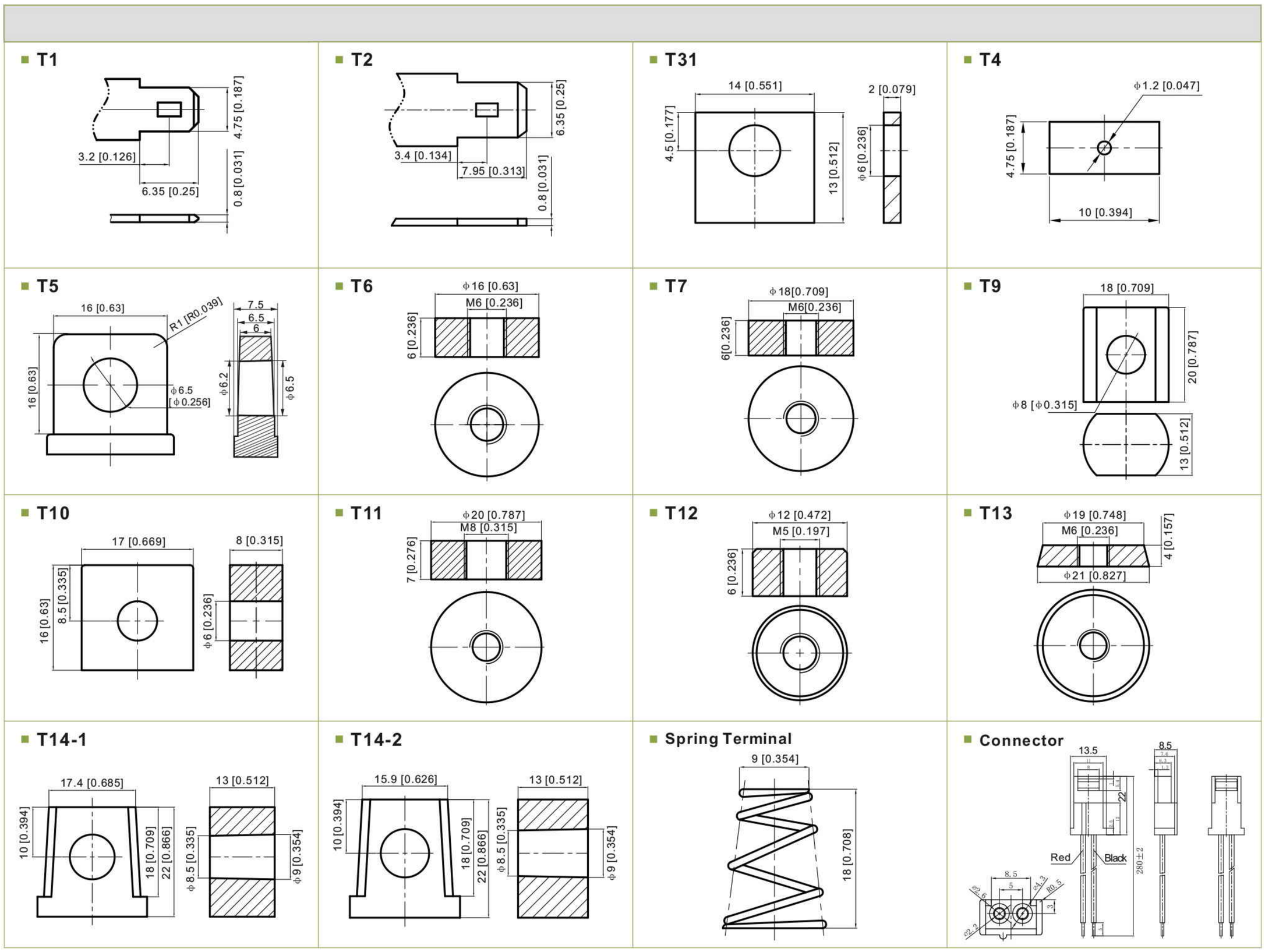

مشخصات باطری های ولتکس:

- دارای استانداردهای معتبر جهانی CE و UR از امریکا و اروپا
- دارای طول عمر بین ۷ سال تا ۱۰ سال
- قابلیت شارژ و دشارژ به دفعات مکرر
- گارانتی معتبر به همراه کارت گارانتی
- قابلیت نگهداری طولانی بدون نیاز به شارژ مجدد
- دارای تاییدیه از اداره استاندارد ایران
- بی نیاز از هرگونه کنترل و یا اضافه کردن آب و اسید
- کیفیت پایدار و قابلیت اطمینان بالا
- حداقل تاثیر پذیری از پارامترهای محیطی

LP II Models and Parameters (2V Series)

Typical Applications

- Tele-communication central station (wired or cellular)
- Power system communication, military communication, etc.
- Network communication including: data transmission, television signal transmission, etc.
- Uninterruptable Power System (UPS- for Telecom)

Model	Nominal Voltage (V)	Rated Capacity (Ah)				Approx Dimension								Approx Weight		Terminal type
		20HR	10HR	5HR	1HR	Length		Width		Height		Total Height				
		1.80V/cell	1.80V/cell	1.75V/cell	1.60V/cell	mm	in.	mm	in.	mm	in.	mm	in.	kg	lbs	
LP2-65	2	68.2	65.0	56.5	39.5	170	6.69	72	2.83	205	8.07	212	8.35	4.70	10.4	T6
LP2-72	2	75.6	72.0	62.5	43.7	170	6.69	72	2.83	205	8.07	212	8.35	5.50	12.1	T6
LP2-100	2	105.0	100.0	87.0	60.7	170	6.69	72	2.83	205	8.07	212	8.35	6.00	13.2	T6
LP2-120	2	126.0	120.0	104.5	72.8	170	6.69	98	3.86	205	8.07	212	8.35	7.60	16.8	T7
LP2-130	2	136.6	130.0	113.0	78.9	170	6.69	98	3.86	205	8.07	212	8.35	8.00	17.6	T7
LP2-150	2	157.6	150.0	130.5	91.1	170	6.69	98	3.86	205	8.07	212	8.35	8.50	18.7	T7
LP2-200	2	210.0	200.0	174.0	121.4	170	6.69	110	4.33	328	12.9	350	13.78	12.9	28.4	T11
LP2-250	2	262.0	250.0	217.5	151.8	170	6.69	110	4.33	328	12.9	350	13.78	14	30.9	T11
LP2-300	2	316.0	300.0	261.0	182.1	170	6.69	150	5.91	328	12.9	350	13.78	17.9	39.5	T11
LP2-350	2	368.0	350.0	304.5	212.5	170	6.69	150	5.91	328	12.9	350	13.78	19	41.9	T11
LP2-400	2	420.0	400.0	348.0	242.8	210	8.27	175	6.89	330	13.0	350	13.78	24.3	53.6	T11
LP2-450	2	472.0	450.0	391.5	273.2	210	8.27	175	6.89	330	13.0	350	13.78	27	59.5	T11
LP2-500	2	526.0	500.0	435.0	303.5	240	9.45	175	6.89	330	13.0	350	13.78	29.3	64.6	T11
LP2-600	2	630.0	600.0	522.0	364.2	300	11.81	175	6.89	330	13.0	350	13.78	35.5	78.3	T11
LP2-700	2	736.0	700.0	609.0	424.9	300	11.81	175	6.89	330	13.0	350	13.78	38.1	84	T11
LP2-800	2	840.0	800.0	696.0	485.6	410	16.14	175	6.89	330	13.0	350	13.78	50.1	110.5	T11
LP2-1000	2	1050.0	1000.0	870.0	607.0	475	18.70	175	6.89	328	12.9	350	13.78	57.0	125.7	T11
LP2-1200	2	1260.0	1200.0	1044.0	728.4	475	18.70	175	6.89	328	12.9	350	13.78	63.7	140.5	T11
LP2-1500	2	1576.0	1500.0	1305.0	910.5	403	15.87	354	13.94	339	13.4	349	13.74	94.0	207.3	T11
LP2-1800	2	1890.0	1800.0	1566.0	1092.6	403	15.87	354	13.94	339	13.4	349	13.74	101.0	222.7	T11
LP2-2000	2	2100.0	2000.0	1740.0	1214.0	490	19.29	350	13.78	339	13.4	349	13.74	119.0	262.4	T11
LP2-2500	2	2626.0	2500.0	2175.0	1517.5	490	19.29	350	13.78	339	13.4	349	13.74	132.0	291.1	T11
LP2-3000	2	3150.0	3000.0	2610.0	1821.0	709	27.91	350	13.78	337	13.3	347	13.66	181.0	399.1	T11

VdS Intertek ETL SEMKO CE TS16949 ISO14001 ISO9001 OHSAS18001

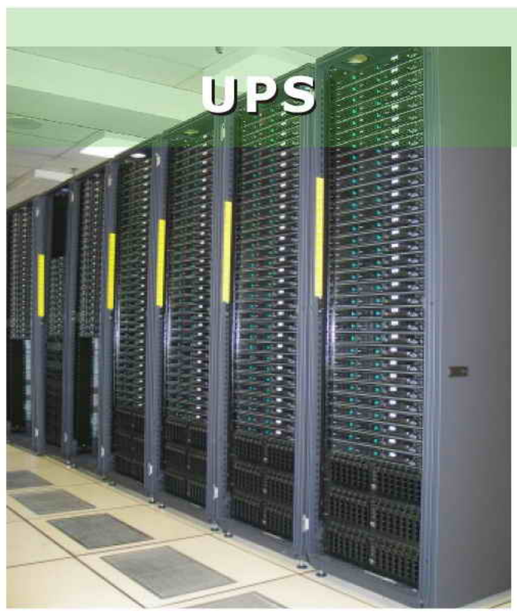

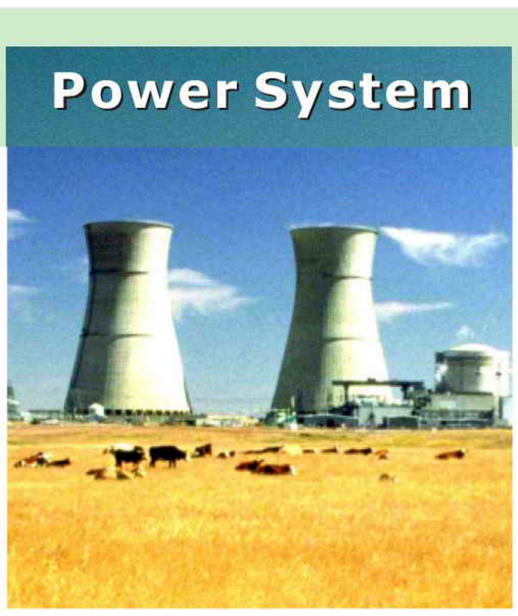

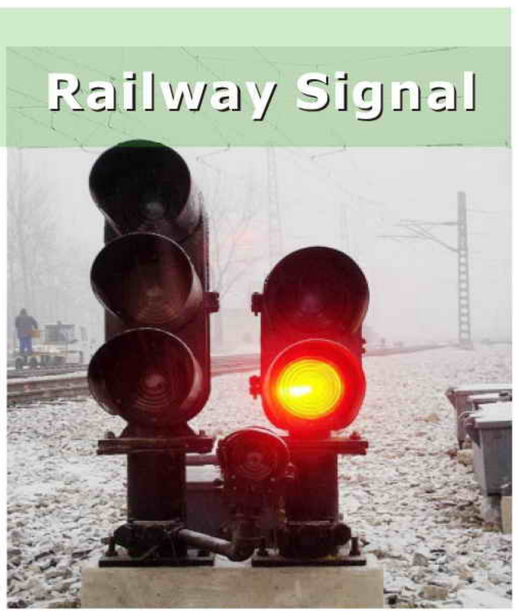

Specifications subject to change without notice.

LP SERIES

General Features

- Using oxygen recombination technology: maintenance-free
- PbCaSn alloy for plate grids: less gassing, less self-discharging
- High quality AGM separator: extend cycle life and prevent micro short circuit
- ABS material: increase the strength of battery container. (Flame-retardant ABS is optional)
- High purity raw material: ensure low self discharge rate
- Silver-coated copper terminals (T1, T2 terminal), brass insert terminals and lead terminals improve the electric conductivity

LP Modelsand Parameters (Small size)

Typical Applications

- All purpose
- Uninterruptable Power Supply (UPS)
- Electric Power System (EPS)
- Emergency backup power supply
- Emergency light
- Railway signal
- Aircraft signal
- Alarm and security system
- Electronic apparatus and equipment
- Communication power supply
- DC power supply
- Auto control system

Model	Nominal Voltage (V)	Rated Capacity (Ah)				Approx Dimension								Approx Weight		Terminal type
		20HR	10HR	5HR	1HR	Length		Width		Height		Total Height				
		1.80V/cell	1.80V/cell	1.75V/cell	1.60V/cell	mm	in.	mm	in.	mm	in.	mm	in.	kg	lbs	
LP2-4.0	2	4.00	3.72	3.36	2.43	48	1.89	25	0.98	101	3.98	107	4.21	0.28	0.62	T1
LP4-0.4	4	0.40	0.37	0.335	0.243	35	1.38	22	0.87	40	1.57	45	1.77	0.06	0.132	/
LP4-0.7	4	0.70	0.65	0.59	0.425	35	1.38	22	0.87	64	2.52	68.5	2.7	0.100	0.22	/
LP4-1.2	4	1.20	1.12	1.01	0.728	35	1.38	22	0.87	92	3.62	97	3.82	0.150	0.331	/
LP4-3.5	4	3.50	3.26	2.94	2.12	90	3.54	34	1.34	59	2.32	65	2.56	0.45	0.99	T1
LP4-4.5	4	4.50	4.19	3.78	2.73	52.5	2.07	48	1.89	94	3.70	100	3.94	0.60	1.32	T1/T2
LP4-5.0	4	5.00	4.65	4.20	3.04	91	3.58	50	1.97	74	2.91	74	2.91	0.66	1.46	T1/T2
LP4-8.0	4	8.00	7.44	6.80	5.02	91	3.58	50	1.97	101	3.98	101	3.98	0.97	2.14	T2
LP4-10	4	10.0	9.30	8.50	6.28	101.5	4.00	50	1.97	94	3.70	100	3.94	1.14	2.51	T2
LP4-20	4	20.0	18.6	17.0	12.6	149	5.87	43	1.69	154	6.06	160	6.30	2.20	4.85	T2/T3
LP6-0.5	6	0.50	0.47	0.42	0.304	57	2.24	14	0.55	50	1.97	52	2.05	0.10	0.22	/
LP6-1.0	6	1.00	0.93	0.84	0.607	51	2.01	42	1.65	51	2.01	57	2.24	0.25	0.55	T1
LP6-1.2	6	1.20	1.12	1.01	0.728	97	3.82	24	0.94	51.5	2.03	57.5	2.26	0.29	0.64	T1
LP6-2.0	6	2.00	1.86	1.68	1.21	43	1.69	37	1.46	76	2.99	76	2.99	0.34	0.75	/
LP6-2.8	6	2.80	2.60	2.35	1.7	66	2.60	33	1.30	97	3.82	103	4.06	0.57	1.26	T1
LP6-3.2	6	3.20	2.98	2.69	1.94	134	5.28	34	1.34	60	2.36	66	2.60	0.67	1.48	T1
LP6-4.0	6	4.00	3.72	3.36	2.43	70	2.76	47	1.85	100	3.94	106	4.17	0.74	1.63	T1/T4
LP6-4.5	6	4.50	4.19	3.78	2.73	70	2.76	47	1.85	100	3.94	106	4.17	0.81	1.79	T1
LP6-4.5S	6	4.50	4.19	3.78	2.73	67	2.64	67	2.64	96	3.78	109	4.29	0.81	1.79	S
LP6-5.0	6	5.00	4.65	4.20	3.04	169	6.65	35	1.38	70	2.76	74	2.91	0.95	2.09	T1
LP6-5.4	6	5.40	5.02	4.53	3.28	70	2.76	47	1.85	100	3.94	106	4.17	0.80	1.76	T1

Note:model number followed with H-tall version and L-long version

LP Models and Parameters Continued (Small size)

Model	Nominal Voltage (V)	Rated Capacity (Ah)				Approx Dimension								Approx Weight		Terminal type
						Length		Width		Height		Total Height				
		20HR	10HR	5HR	1HR											
		1.80V/cell	1.80V/cell	1.75V/cell	1.60V/cell	mm	in.	mm	in.	mm	in.	mm	in.	kg	lbs	
LP6-6.0	6	6.00	5.58	5.05	3.64	70	2.76	47	1.85	100	3.94	106	4.17	0.88	1.94	T1
LP6-6.0C	6	6.00	5.58	5.05	3.64	70	2.76	47	1.85	100	3.94	105	4.13	0.88	1.94	T4
LP6-7.0	6	7.00	6.51	5.95	4.40	151	5.94	34	1.34	94	3.7	100	3.94	1.1	2.43	T1/T2
LP6-7.2	6	7.20	6.7	6.12	4.52	151	5.94	34	1.34	94	3.7	100	3.94	1.2	2.65	T1/T2
LP6-7.5	6	7.50	6.98	6.40	4.71	151	5.94	34	1.34	94	3.7	100	3.94	1.26	2.78	T1/T2
LP6-7.8	6	7.80	7.25	6.63	4.90	151	5.94	34	1.34	94	3.7	100	3.94	1.28	2.82	T1/T2
LP6-8.5	6	8.50	7.91	7.25	5.34	151	5.94	34	1.34	94	3.7	100	3.94	1.20	2.65	T1/T2
LP6-8.5H	6	8.50	7.91	7.25	5.34	98	3.86	56	2.20	118	4.65	120	4.72	1.52	3.35	T1/T2
LP6-10	6	10.0	9.3	8.50	6.28	151	5.94	51	2.01	94	3.7	100	3.94	1.57	3.46	T1/T2
LP6-12	6	12.0	11.2	10.20	7.54	151	5.94	51	2.01	94	3.7	100	3.94	1.8	3.97	T1/T2
LP6-13	6	13.0	12.09	11.05	8.16	108	4.25	70	2.76	140	5.51	140	5.51	2.24	4.94	NT1/PT2
LP6-14	6	14.0	13.0	11.9	8.79	151	5.94	51	2.01	94	3.7	100	3.94	2.05	4.52	T1/T2
LP6-20	6	20.0	18.6	17.0	12.6	157	6.18	83	3.27	125	4.92	125	4.92	3.21	7.08	T3
LP6-36	6	36.0	33.5	30.6	22.6	161	6.34	87	3.43	163	6.42	169	6.65	5.5	12.1	T2/T3
LP8-3.2	8	3.20	2.98	2.69	1.94	134	5.28	36.5	1.44	63	2.48	69	2.72	0.75	1.65	T1
LP12-0.8	12	0.80	0.74	0.67	0.486	96	3.78	25	0.98	62	2.44	62	2.44	0.35	0.77	/
LP12-1.2	12	1.20	1.12	1.01	0.728	97	3.82	43	1.69	52	2.05	58	2.28	0.57	1.26	T1
LP12-1.9	12	1.90	1.77	1.60	1.15	178	7.01	35	1.38	60	2.36	66	2.6	0.87	1.92	T1
LP12-2.0NP	12	2.00	1.86	1.68	1.21	151	5.94	20	0.79	89	3.5	89	3.5	0.68	1.5	/
LP12-2.0C1	12	2.00	1.86	1.68	1.21	143	5.63	24	0.94	65	2.56	65	2.56	0.57	1.26	/
LP12-2.2	12	2.20	2.05	1.85	1.34	70	2.76	48	1.89	98	3.86	104	4.09	0.8	1.76	T1
LP12-2.3	12	2.30	2.14	1.93	1.40	178	7.01	35	1.38	60	2.36	66	2.6	0.96	2.12	T1
LP12-2.3C	12	2.30	2.14	1.93	1.40	182	7.17	24	0.94	61	2.4	61	2.4	0.78	1.72	/
LP12-2.8	12	2.80	2.6	2.35	1.70	132	5.2	33	1.30	98	3.86	104	4.09	1.18	2.6	T1
LP12-2.9	12	2.90	2.7	2.44	1.76	79	3.11	56	2.20	99	3.9	105	4.13	1.1	2.43	T1
LP12-3.2	12	3.20	2.98	2.69	1.94	134	5.28	67	2.64	60.5	2.38	66.5	2.62	1.35	2.98	T1
LP12-4.0L	12	4.00	3.72	3.36	2.43	195	7.68	47	1.85	70	2.76	76	2.99	1.6	3.53	T1
LP12-4.0	12	4.00	3.72	3.36	2.43	90	3.54	70	2.76	101	3.98	107	4.21	1.45	3.2	T1
LP12-4.5	12	4.50	4.19	3.78	2.73	90	3.54	70	2.76	101	3.98	107	4.21	1.48	3.26	T1
LP12-5.0	12	5.00	4.65	4.20	3.04	151	5.94	53	2.09	93	3.66	99	3.9	1.75	3.86	T1/T2
LP12-5.4	12	5.40	5	4.54	3.28	90	3.54	70	2.76	101	3.98	107	4.21	1.65	3.64	T1
LP12-6.0	12	6.00	5.58	5.05	3.64	90	3.54	70	2.76	101	3.98	107	4.21	1.77	3.90	T1/T2
LP12-6.0H	12	6.00	5.58	5.05	3.64	140	5.51	48	1.89	102	4.02	103	4.06	1.61	3.55	NT1/PT2
LP12-6.5	12	6.50	6.05	5.55	4.08	151	5.94	65	2.56	93.5	3.68	99.0	3.90	2.06	4.54	T1/T2
LP12-7.0	12	7.00	6.53	5.80	4.26	151	5.94	65	2.56	93.5	3.68	99.0	3.90	2.18	4.81	T1/T2
LP12-7.2	12	7.20	6.72	6.00	4.38	151	5.94	65	2.56	93.5	3.68	99.0	3.90	2.35	5.18	T1/T2
LP12-7.5	12	7.50	7.00	6.25	4.56	151	5.94	65	2.56	93.5	3.68	99.0	3.90	2.45	5.4	T1/T2
LP12-7.8	12	7.80	7.28	6.50	4.74	151	5.94	65	2.56	93.5	3.68	99.0	3.90	2.50	5.51	T1/T2
LP12-8.5	12	8.50	7.93	7.15	5.31	151	5.94	65	2.56	93.5	3.68	99.0	3.90	2.45	5.4	T1/T2
LP12-9.0	12	9.0	8.31	7.55	6.24	151	5.9	65	2.6	93.5	3.68	99.0	3.90	2.66	5.87	T1/T2
LP12-10	12	10.0	9.3	8.5	6.28	151	5.94	98	3.86	95	3.74	101	3.98	3.25	7.17	T1/T2
LP12-10H	12	10.0	9.3	8.5	6.28	151	5.94	65	2.56	111	4.37	117	4.61	3.20	7.06	T1/T2
LP12-12	12	12.0	11.2	10.2	7.54	151	5.94	98	3.86	95	3.74	101	3.98	3.50	7.72	T1/T2
LP12-14	12	14.0	13.0	11.9	8.79	151	5.94	98	3.86	95	3.74	101	3.98	4.05	8.93	T1/T2
LP12-15	12	15.0	14.0	12.8	9.42	181.5	7.15	77	3.03	167.5	6.59	167.5	6.59	4.70	10.4	Lead Terminal
LP12-18	12	18.0	16.7	15.3	11.3	181.5	7.15	77	3.03	167.5	6.59	167.5	6.59	5.40	11.9	T3/T12
LP12-20	12	20.0	18.6	17	12.6	181.5	7.15	77	3.03	167.5	6.59	167.5	6.59	5.78	12.74	T3
LP12-24	12	24.0	22.3	20.4	15.07	166	6.54	175	6.89	125	4.92	125	4.92	7.2	15.9	T3/T12
LP12-24H	12	24.0	22.3	20.4	15.07	165	6.5	125	4.92	175	6.89	175	6.89	8.7	19.2	T10/T12
LP12-26	12	26.0	24.2	22.1	16.3	166	6.54	175	6.89	125	4.92	125	4.92	8	17.6	T3/T12

Model	Nominal Voltage (V)	Rated Capacity(Ah)				Approx Dimension								Approx Weight		Terminal type
		20HR	10HR	5HR	1HR	Length		Width		Height		Total Height				
		1.80V/cell	1.80V/cell	1.75V/cell	1.60V/cell	mm	in.	mm	in.	mm	in.	mm	in.	kg	lbs	
LP12-28	12	28.0	26.0	23.8	17.6	166	6.54	175	6.89	125	4.92	125	4.92	8.1	17.9	T3/T12
LP12-28H	12	28.0	26.0	23.8	17.6	165	6.5	125	4.92	175	6.89	175	6.89	9.5	20.9	T3/T10
LP12-30	12	30.0	27.9	25.5	18.8	166	6.54	175	6.89	125	4.92	125	4.92	8.6	19.0	T12
LP12-30H	12	30.0	27.9	25.5	18.8	195	7.68	130	5.12	164	6.46	178	7.01	9.7	21.4	T5
LP12-33	12	33.0	30.7	28.1	20.7	195	7.68	130	5.12	164	6.46	180	7.09	10.5	23.2	T5
LP12-35	12	35.0	32.6	29.8	22.0	195	7.68	130	5.12	164	6.46	178	7.01	11.2	24.7	T5/T6
LP24-1.3	24	1.30	1.21	1.09	0.789	194	7.64	44	1.73	52	2.05	58	2.28	1.10	2.43	T1
LP24-3.5	24	3.50	3.26	2.94	2.12	185	7.28	73	2.87	70	2.76	70	2.76	2.60	5.73	/
LP24-4.0	24	4.00	3.72	3.36	2.43	300	11.8	67	2.64	62	2.44	68	2.68	3.10	6.84	T1/T2

LP Models and Parameters (Middle size)

Typical Applications

- All purpose
- Uninterruptable Power Supply (UPS)
- Electric Power System (EPS)
- Emergency backup power supply
- Emergency light
- Railway signal
- Aircraft signal
- Alarm and security system
- Electronic apparatus and equipment
- Communication power supply
- DC power supply
- Auto control system

Model	Nominal Voltage (V)	Rated Capacity (Ah)				Approx Dimension								Approx Weight		Terminal type
		20HR	10HR	5HR	1HR	Length		Width		Height		Total Height				
		1.80V/cell	1.80V/cell	1.75V/cell	1.60V/cell	mm	in.	mm	in.	mm	in.	mm	in.	kg	lbs	
LP6-60	6	62.4	60.0	51.5	36.6	185	7.28	112	4.41	205	8.07	205	8.07	9.1	20.07	T2/T3
LP6-100	6	104.0	100.0	86.0	61.0	195	7.68	170	6.69	206.5	8.13	212.5	8.37	15.6	34.40	T6
LP6-120	6	124.8	120.0	103.0	73.2	280	11.02	128	5.04	203	7.99	203	7.99	16.8	37.04	T6
LP6-150	6	156.0	150.0	129.0	91.5	260	10.24	180	7.09	247	9.72	253	9.96	21.2	46.75	T7
LP6-200	6	210.0	200.0	172.0	122.0	306	12.05	168	6.61	222	8.74	228	8.98	28.2	62.2	T8
LP12-38	12	40.0	38.0	32.7	23.2	197	7.76	165	6.50	170	6.69	170	6.69	12.2	26.90	T6/T12
LP12-40	12	40.0	38.5	33.1	23.5	255	10.04	97	3.82	203	7.99	203	7.99	12.5	27.56	T7
LP12-45	12	46.8	45.0	38.7	27.5	197	7.76	165	6.50	170	6.69	170	6.69	14.2	31.31	T6/T12
LP12-50	12	52.0	50.0	43.0	30.5	257	10.12	132	5.20	200	7.87	200	7.87	16.0	35.28	T6
LP12-55	12	57.2	55.0	47.3	33.6	229	9.00	138	5.43	205	8.07	226	8.89	16.5	36.38	T6/T9/T14
LP12-60	12	62.4	60.0	51.5	36.6	259	10.2	168	6.61	208	8.19	214	8.43	18.5	40.79	T6/T14
LP12-65	12	65.0	62.1	53.6	37.5	348	13.70	167	6.57	178	7.01	178	7.01	19.2	42.34	T6
LP12-70	12	72.8	70.0	60	42.7	348	13.70	167	6.57	178	7.01	178	7.01	21.6	47.63	T6
LP12-75	12	78.0	75.0	64.5	45.8	259	10.20	168	6.61	208	8.19	214	8.43	22.3	49.17	T6/T9
LP12-80	12	83.2	80.0	69.0	48.8	259	10.20	168	6.61	208	8.19	214	8.43	24.0	52.92	T6
LP12-90	12	93.6	90.0	77.5	54.9	330	12.99	173	6.81	212	8.35	220	8.66	28.0	61.74	T11
LP12-100	12	104.0	100.0	86	61.0	330	12.99	173	6.81	212	8.35	220	8.66	30.4	67.03	T11
LP12-120	12	124.8	120.0	103.2	73.2	408	16.06	177	6.97	225	8.86	225	8.86	35.0	77.18	T11
LP12-135	12	140.4	135.0	116	82.4	345	13.6	172	6.77	274	10.8	280	11.02	41.2	90.85	T11
LP12-150	12	156.0	150.0	129.0	91.5	483	19	170	6.69	238.5	9.39	238.5	9.39	43.5	95.92	T11
LP12-180	12	187.2	180.0	154.8	109.8	532	20.9	207	8.15	214	8.43	220	8.661	52.8	116.4	T11
LP12-200	12	208.0	200.0	172.0	122.0	522	20.55	240	9.45	218	8.58	224	8.82	61.0	134.5	T11
LP12-250	12	260.0	250.0	215.0	152.5	522	20.55	268	10.55	220	8.66	226	8.90	73.0	161.0	T11

Specifications subject to change without notice.